Tate Grid+ LEC Standard Detail

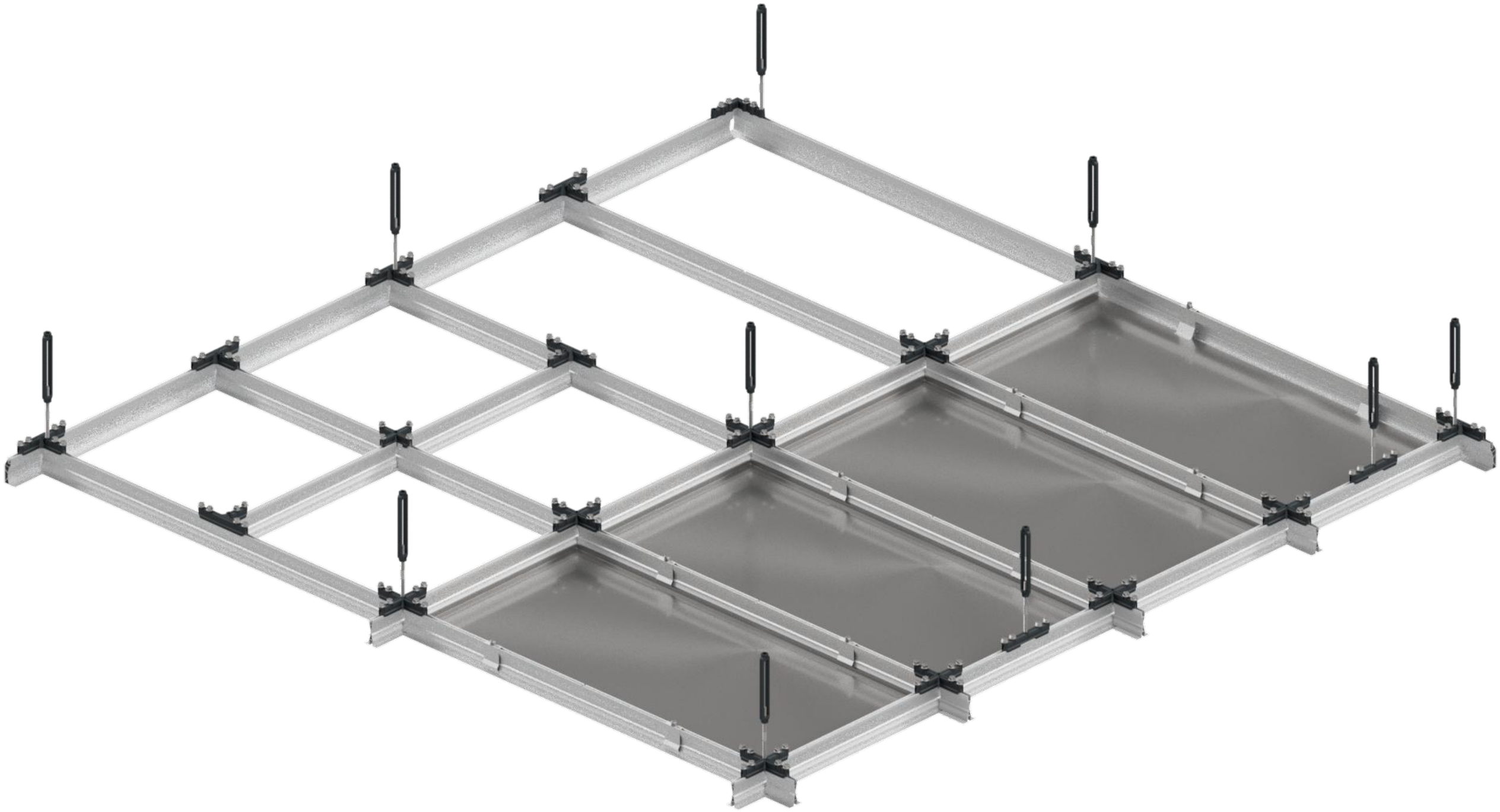

No.	SHEET DETAIL	SHEET NUMBER
1	Tate Grid+ LEC	4
2	Typical Connection - Perimeter	5
3	Typical Connection - Corner	6
4	Typical Connection - XL	7
5	Typical Connection - XL (Splice Connection)	8
6	Typical Connection - Field (600x600 Grid)	9
7	Typical Connection - Straight	10
8	Tate Grid+ LEC Fixed Perimeter to Wall	11
9	Tate Grid+ LEC Fixed Perimeter (Column)	12
10	Configuration of Ceiling Tiles	13
11	Metal Tile Clips Details	14

Tate Grid+ LEC Standard Detail

1.

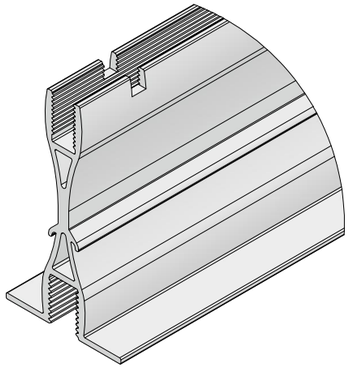

TATE GRID+ LEC
STANDARD MAIN RUNNER
EXTRUSION
(3.6M)

2.

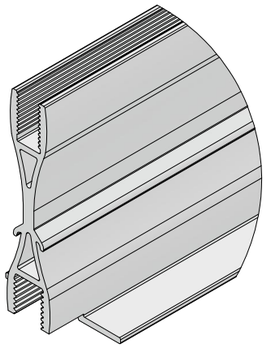

TATE GRID+LEC
COPED STRUCTURAL CROSS
TEE EXTRUSION
(1.2M OR 0.6M)

3.

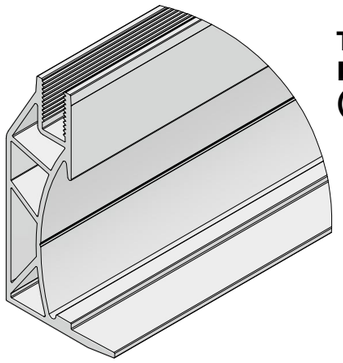

TATE GRID+ LEC
PERIMETER EXTRUSION
(3.6M)

4.

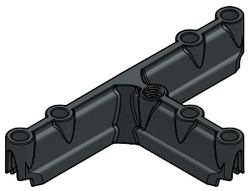

PERIMETER CONNECTOR

5.

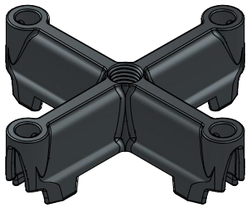

FIELD CONNECTOR
(0.6M x 0.6M GRID ONLY)

6.

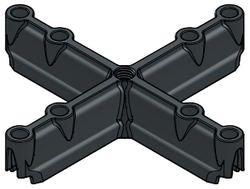

XL CONNECTOR

7.

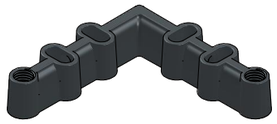

CORNER CONNECTOR

8.

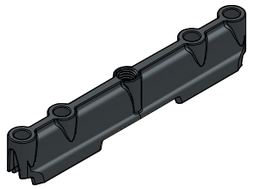

STRAIGHT CONNECTOR

9.

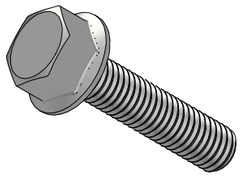

SCREW M8-35 DIN 6921

10.

M10 TURNBUCKLE
ASSEMBLY

11.

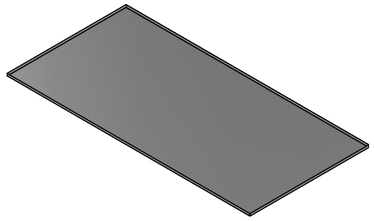

TATE GRID+ LEC
CEILING TILE
(1177x577)

12.

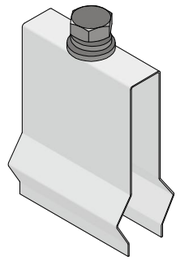

TATE GRID+ LEC
ACCESSIBILITY SCREW CLIP

13.

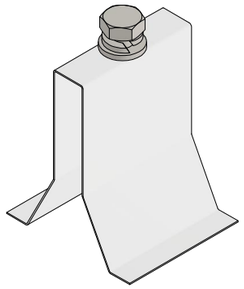

TATE GRID+ LEC
SECURITY HOLD DOWN CLIP

Tate Grid+ LEC Standard Detail

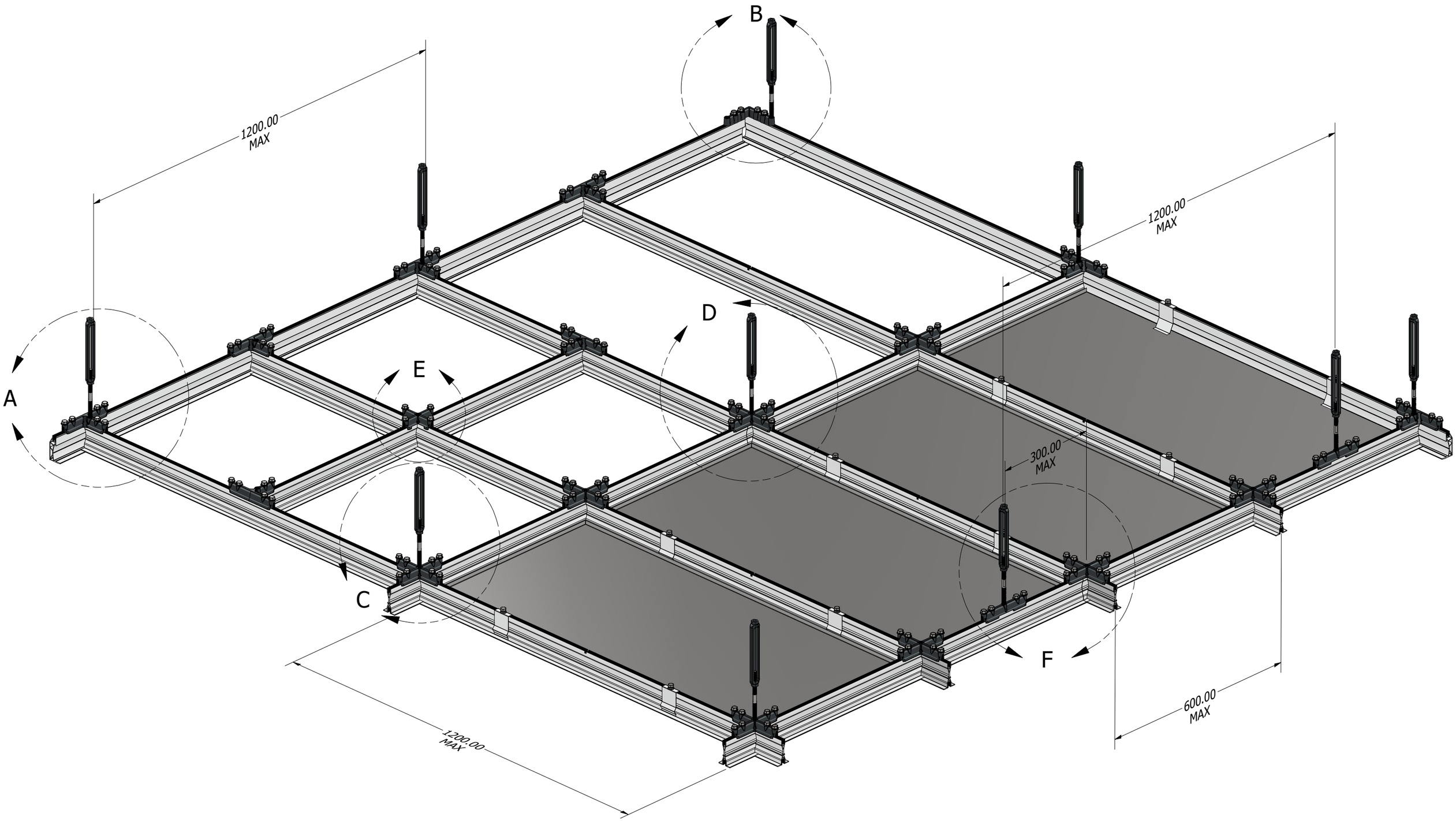

Tate Grid+ LEC Assembly

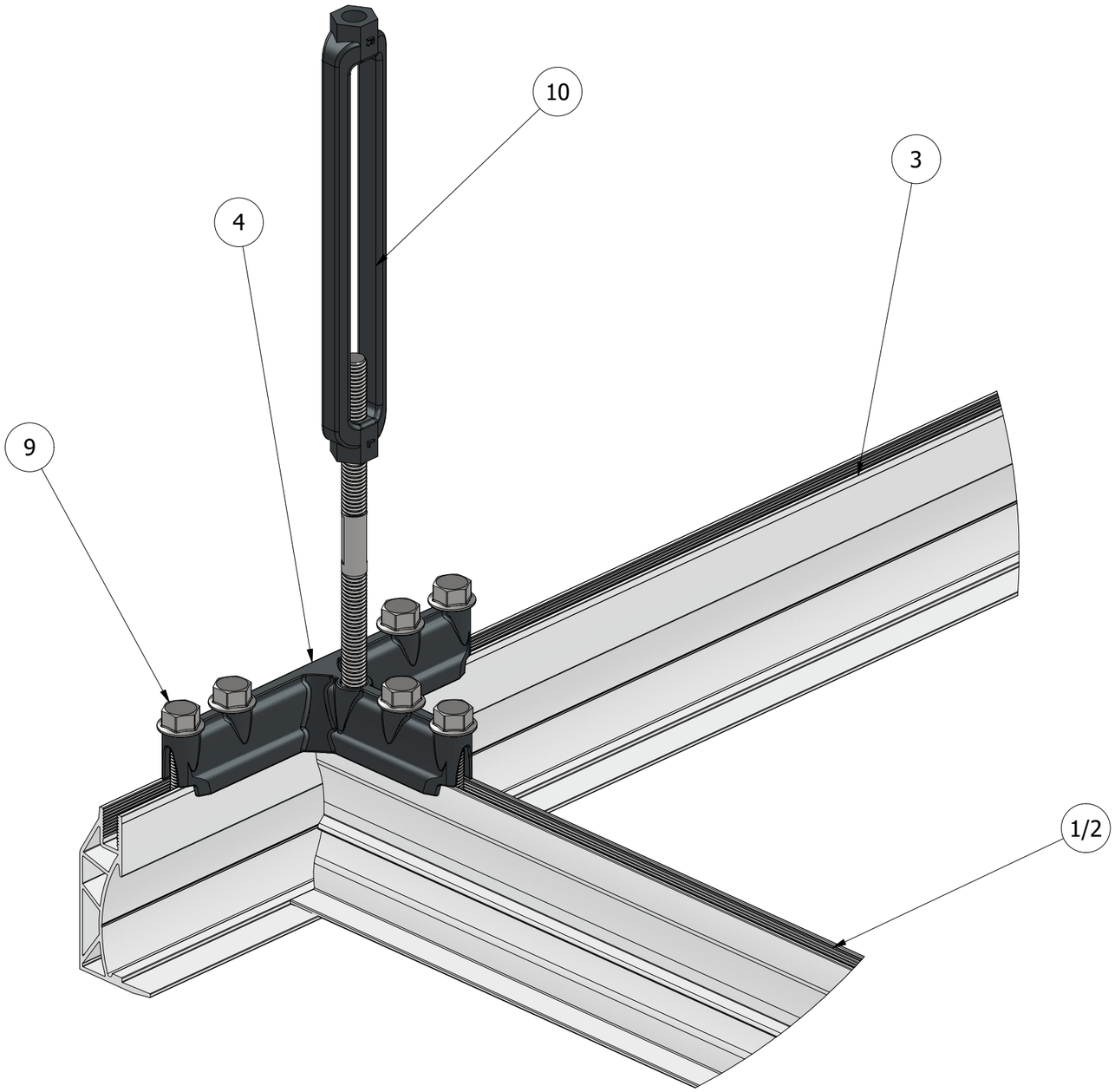

DETAIL A
SCALE 1:2

TATE GRID+ LEC CONNECTOR

Type: Perimeter
Junction: Three Way
Used for: Creating a connection between the inner ceiling grid and the perimeter profiles. Both supported & unsupported configurations.

COMPONENTS

1 - Main Runner Extrusion
2 - Cross Tee Extrusion
3 - Perimeter Extrusion
4 - Perimeter Connector
9 - Screw M8-35 DIN 6921
10 - M10 Turnbuckle Assembly

Tate Grid+ LEC Main Runner (1) can also be connected in this scenario instead of Cross Tee (2)

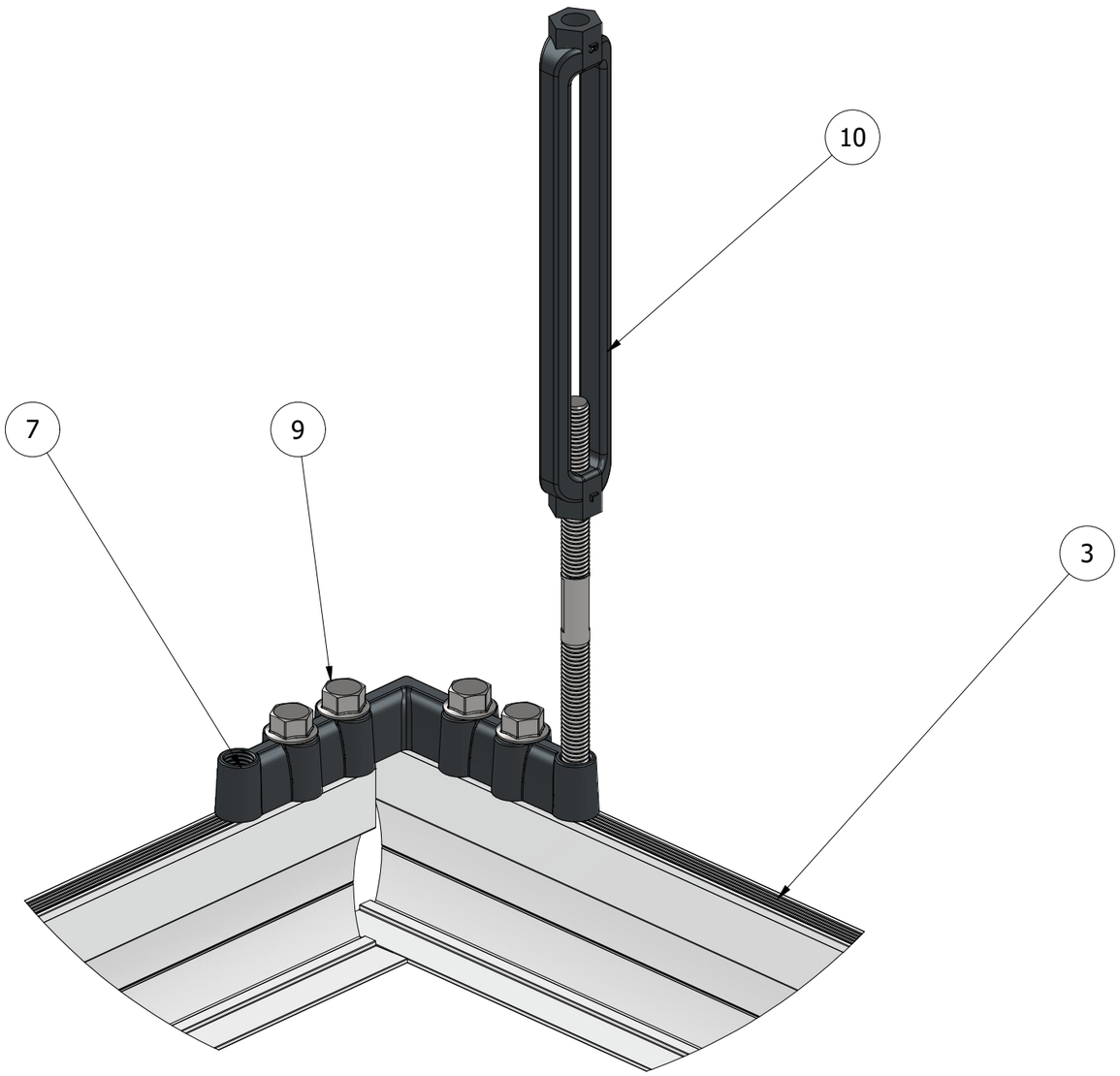

DETAIL B
SCALE 1 / 2

TATE GRID+LEC CONNECTOR

Type: Corner Connection
Junction: Two Way
Used for: Creating a connection at the corners of the ceiling grid. Both supported & unsupported configurations.

COMPONENTS

3 - Perimeter Extrusion
7 - Corner Connector
9 - Screw M8-35 DIN 6921
10 - M10 Turnbuckle Assembly

The drop rod connection can be done in either of the two holes on the connector

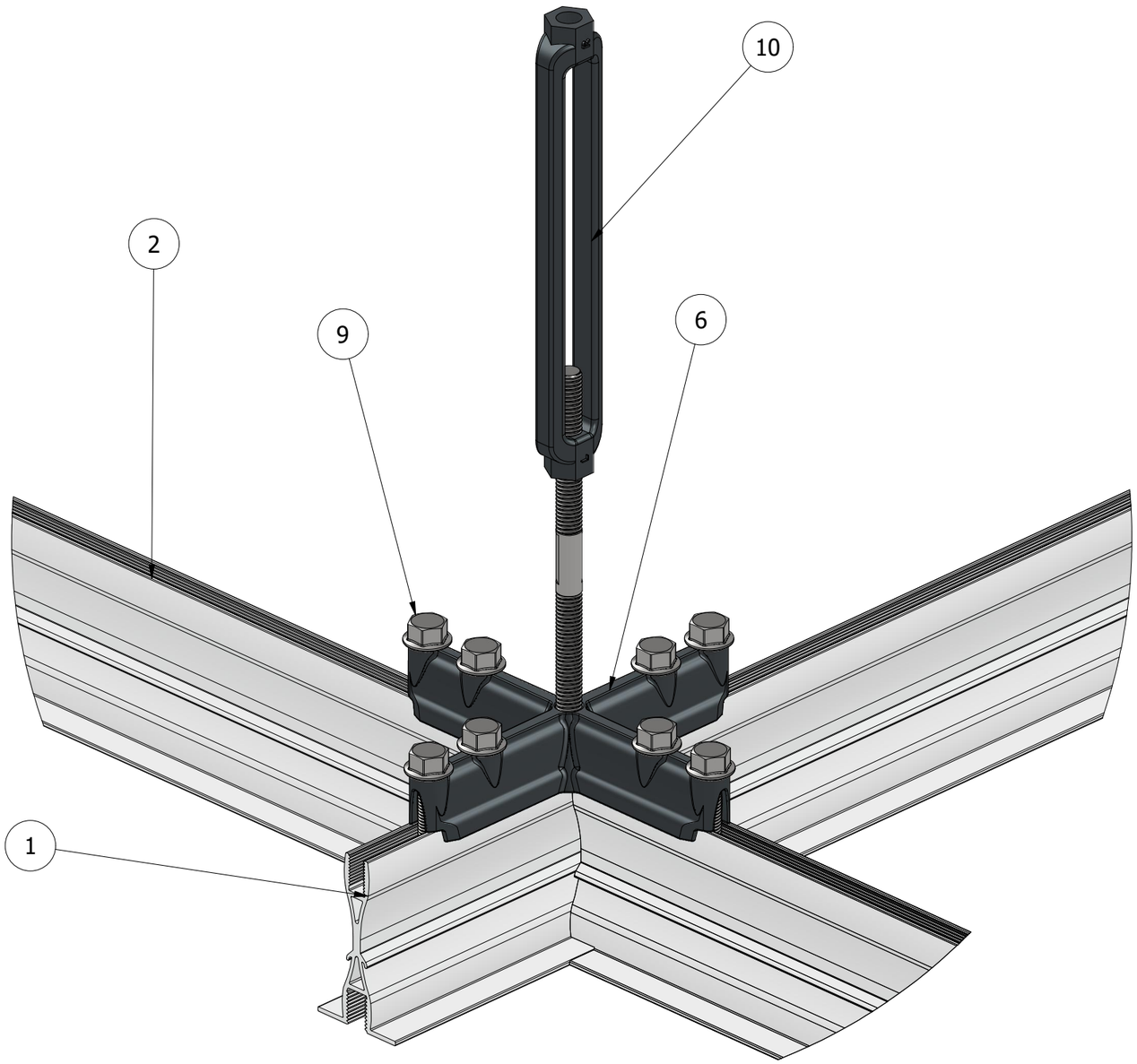

DETAIL C
SCALE 1 / 2

TATE GRID+ LEC CONNECTOR

Type: XL
Junction: Four Way
Used for: Connecting main runners and cross tees at their junction point. Both supported & unsupported configurations.

COMPONENTS

1 - Main Runner Extrusion
2 - Cross Tee Extrusion
6 - XL Connector
9 - Screw M8-35 DIN 6921
10 - M10 Turnbuckle Assembly

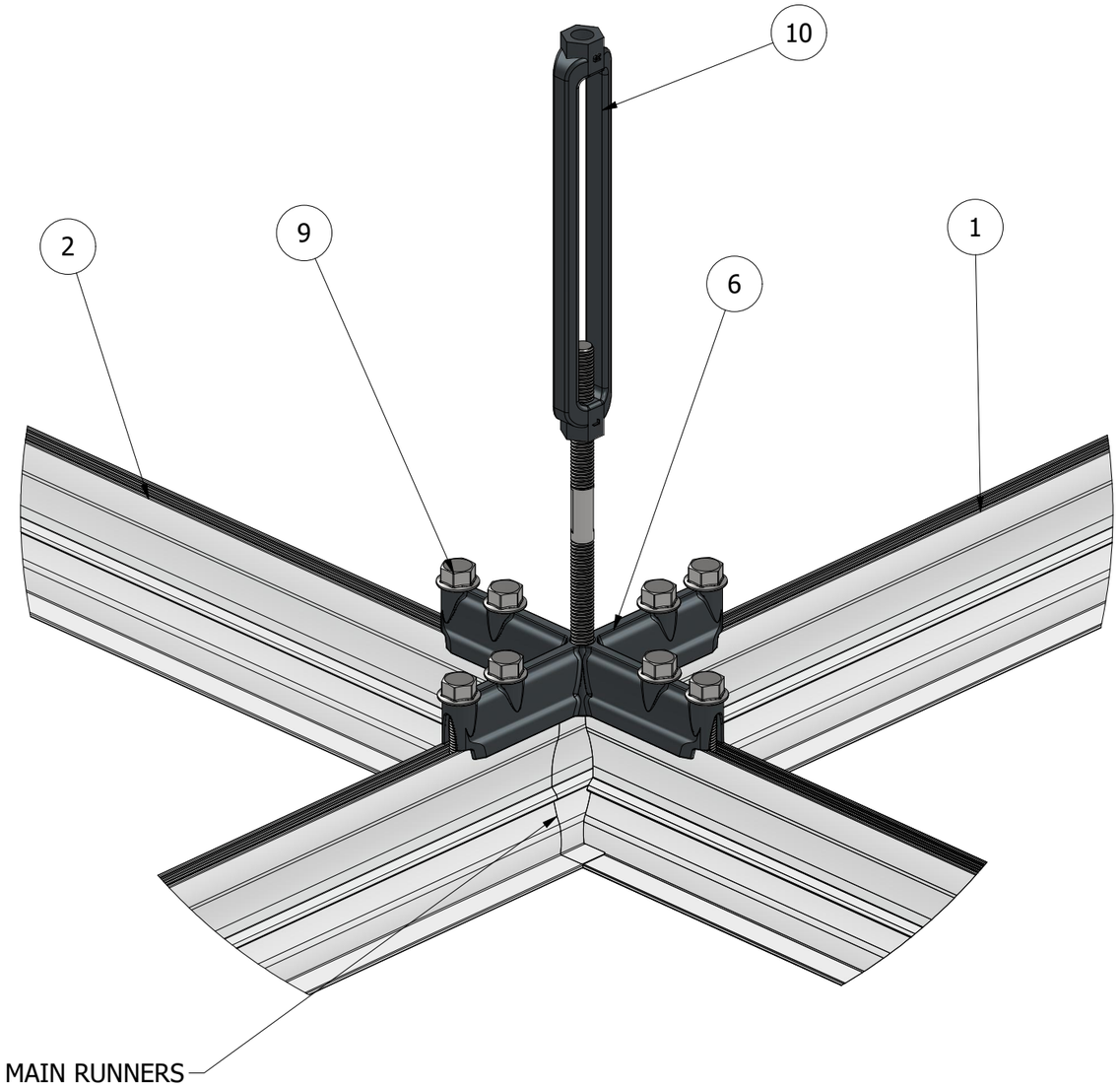

DETAIL D
SCALE 1:2.5

TATE GRID+ LEC CONNECTOR

Type: XL (Splice Connection)
Junction: Four Way
Used for: Connecting main runners and cross tees at their junction point when it aligns with the splice point between main runners. Both supported & unsupported configurations.

COMPONENTS

1 - Main Runner Extrusion
2 - Cross Tee Extrusion
6 - XL Connector
9 - Screw M8-35 DIN 6921
10 - M10 Turnbuckle Assembly

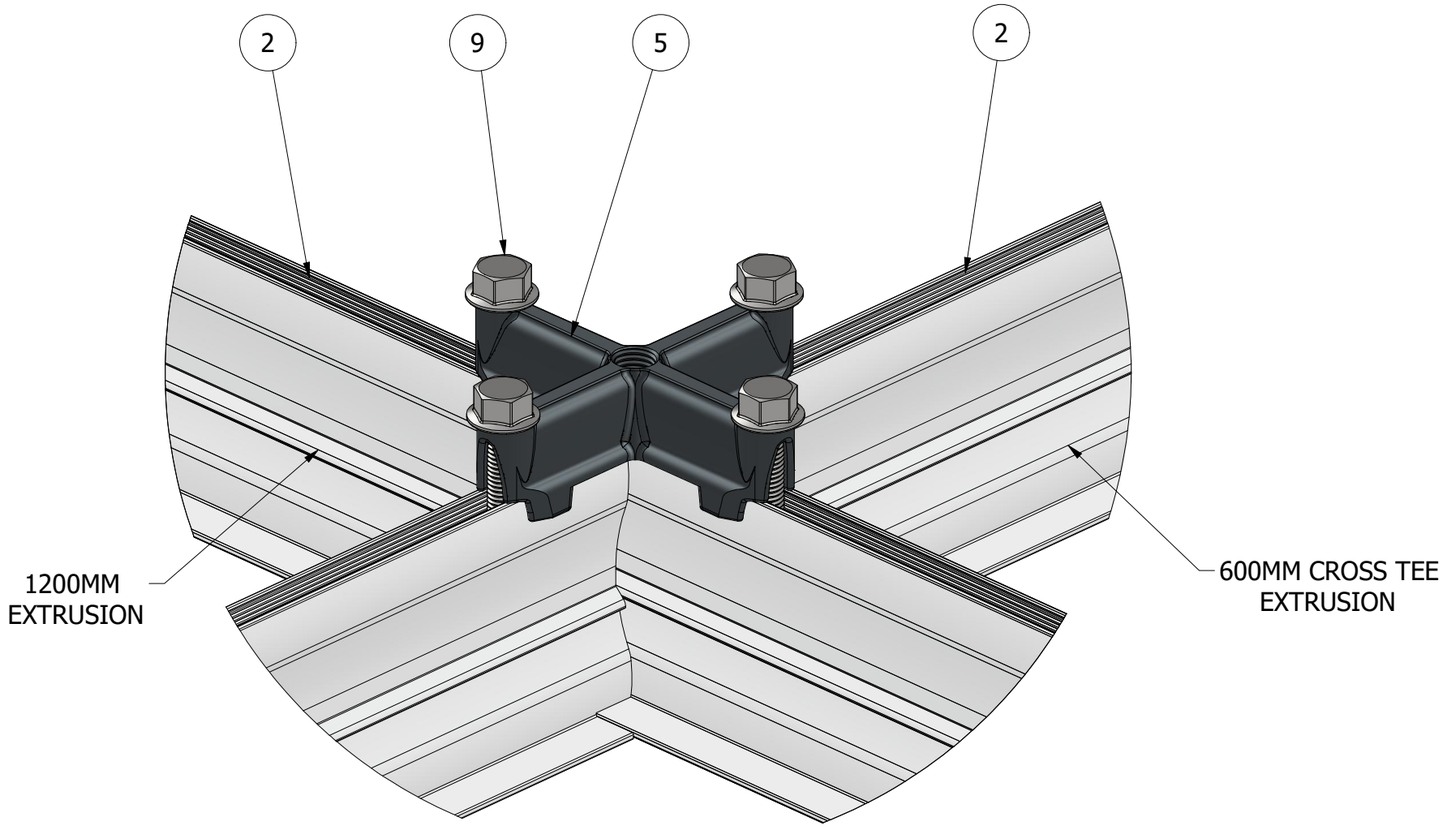

DETAIL E
SCALE 1:1.5

TATE GRID+ LEC CONNECTOR

Type: Field
Junction: Four Way
Used for: Connecting cross tees (1.2 and 0.6m) profiles at required locations as shown. These are unsupported configurations. Usually used at grid of 600mm x 600mm ONLY.

COMPONENTS

2 - Cross Tee Extrusion (1.2M & 0.6M)
5 - Field Connector
9 - Screw M8-35 DIN 6921

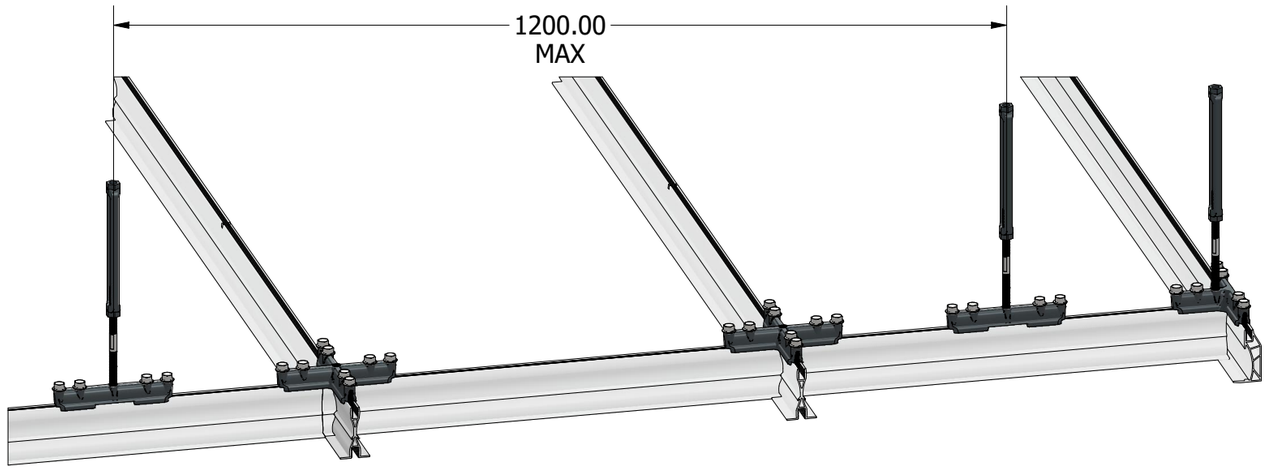

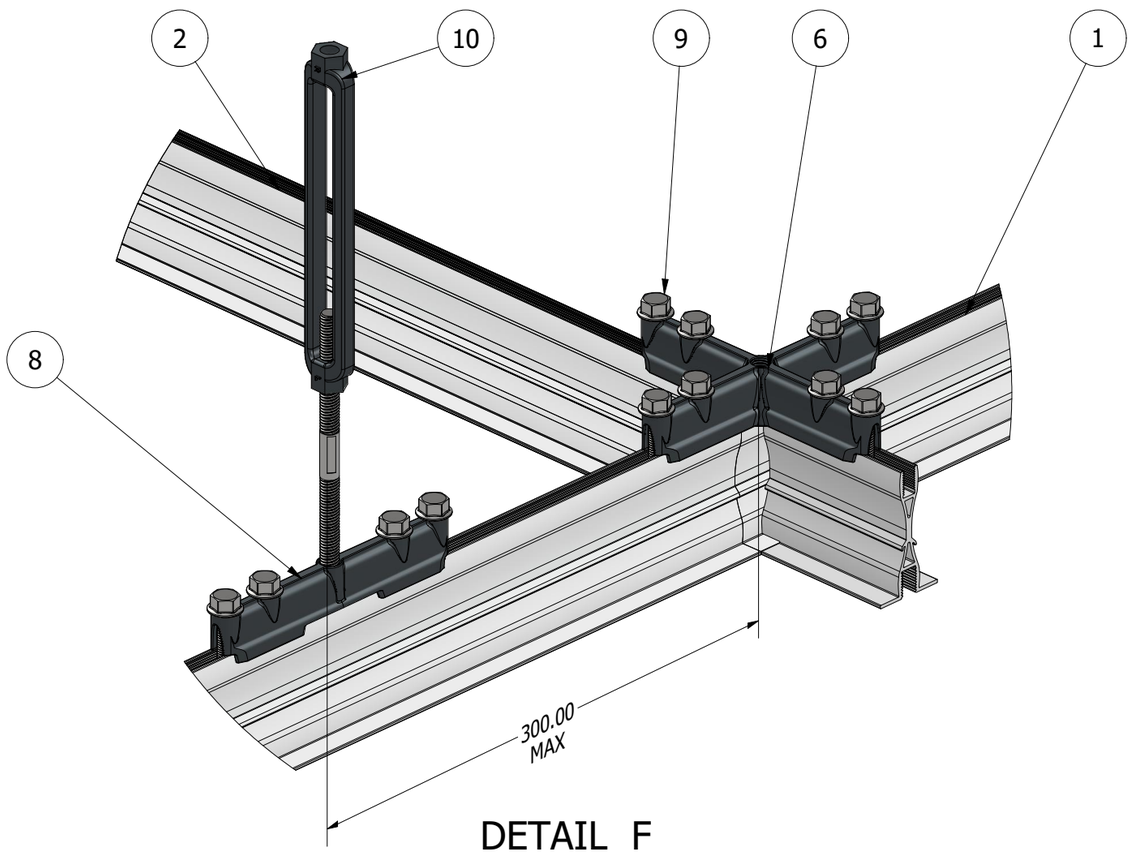

DETAIL F
SCALE 1 / 3

TATE GRID+ LEC CONNECTOR

Type: Straight
Junction: One Way
Used for: Connecting two main runners at their splice point or creating a reinforced anchor point as shown.

Note: Straight connectors can be used on a 1200mm hanging configuration. At Splice, a max of 300mm offset in either direction is required.

COMPONENTS

1 - Main Runner Extrusion
2 - Cross Tee Extrusion
6 - XL Connector
8 - Straight Connector
9 - Screw M8-35 DIN 6921
10 - M10 Turnbuckle Assembly

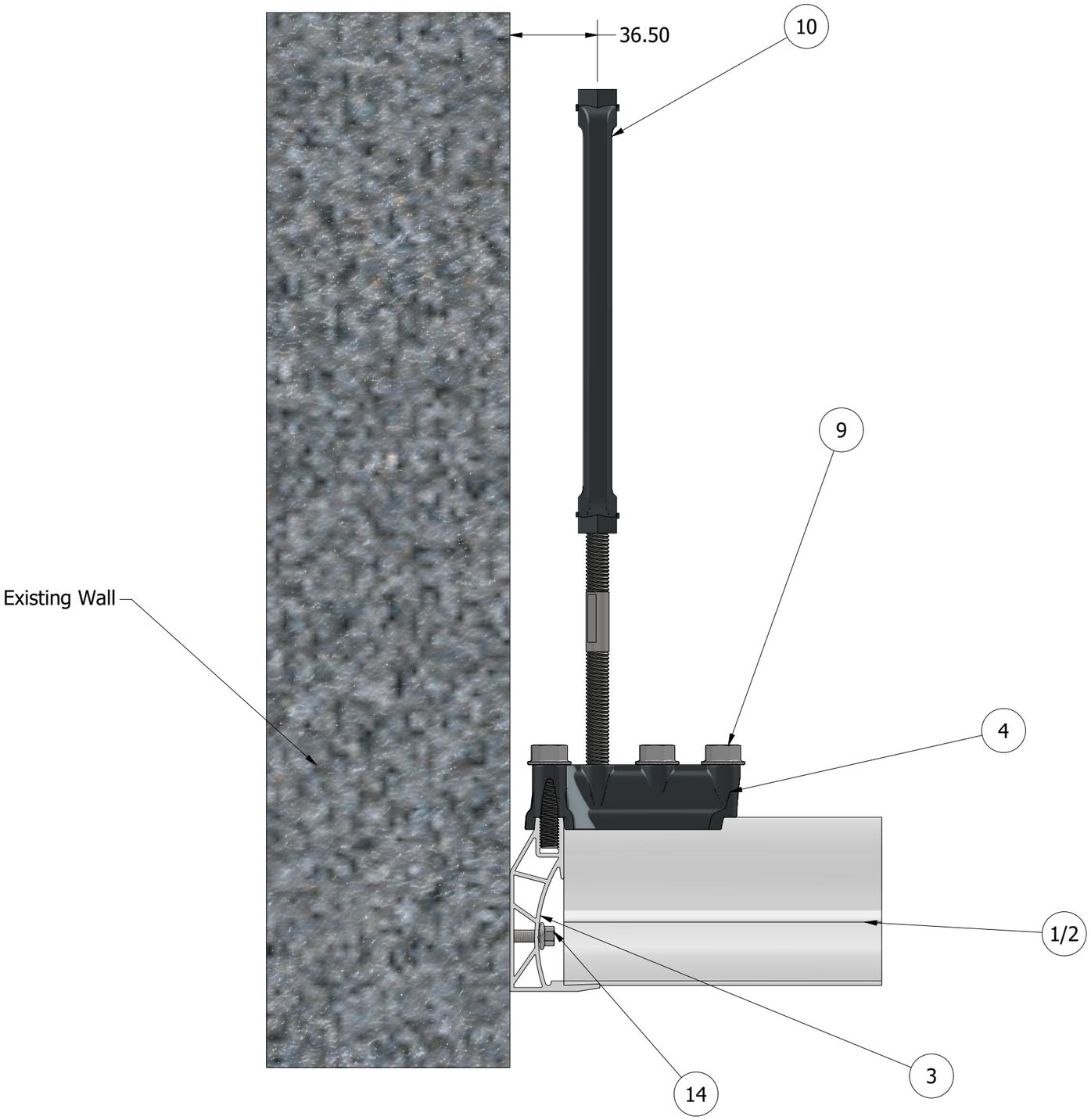

FIXED PERIMETER TO WALL

A fixed perimeter profile is connected directly to the wall.

COMPONENTS

1 - Main Runner Extrusion
2 - Cross Tee Extrusion
3 - Perimeter Extrusion
4 - Perimeter Connector
9 - Screw M8-35 DIN 6921
10 - M10 Turnbuckle Assembly
14 - Fastener (Supplied by others)

Tate Grid+ LEC Main Runner (1) can also be connected in this scenario instead of Cross Tee (2)

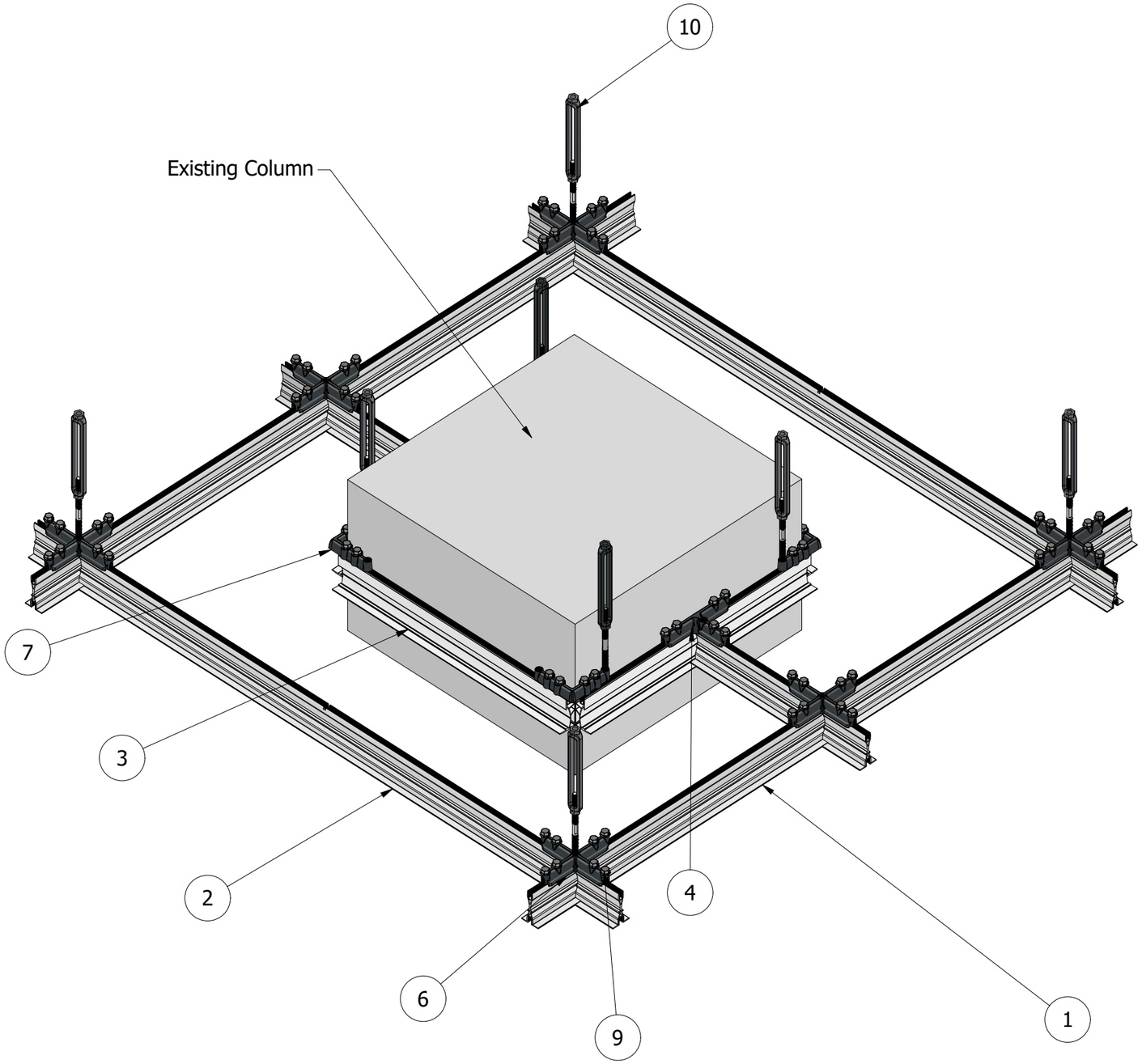

TATE GRID+ LEC FIXED PERIMETER (COLUMN)

A fixed perimeter can be installed around the columns and obstacles. All corners must be supported with a hanger.

COMPONENTS

1 - Main Runner Extrusion
2 - Cross Tee Extrusion
3 - Perimeter Extrusion
4 - Perimeter Connector
6 - XL Connector
7 - Corner Connector
9 - Screw M8-35 DIN 6921
10 - M10 Turnbuckle Assembly

Tate Grid+ LEC Standard Detail

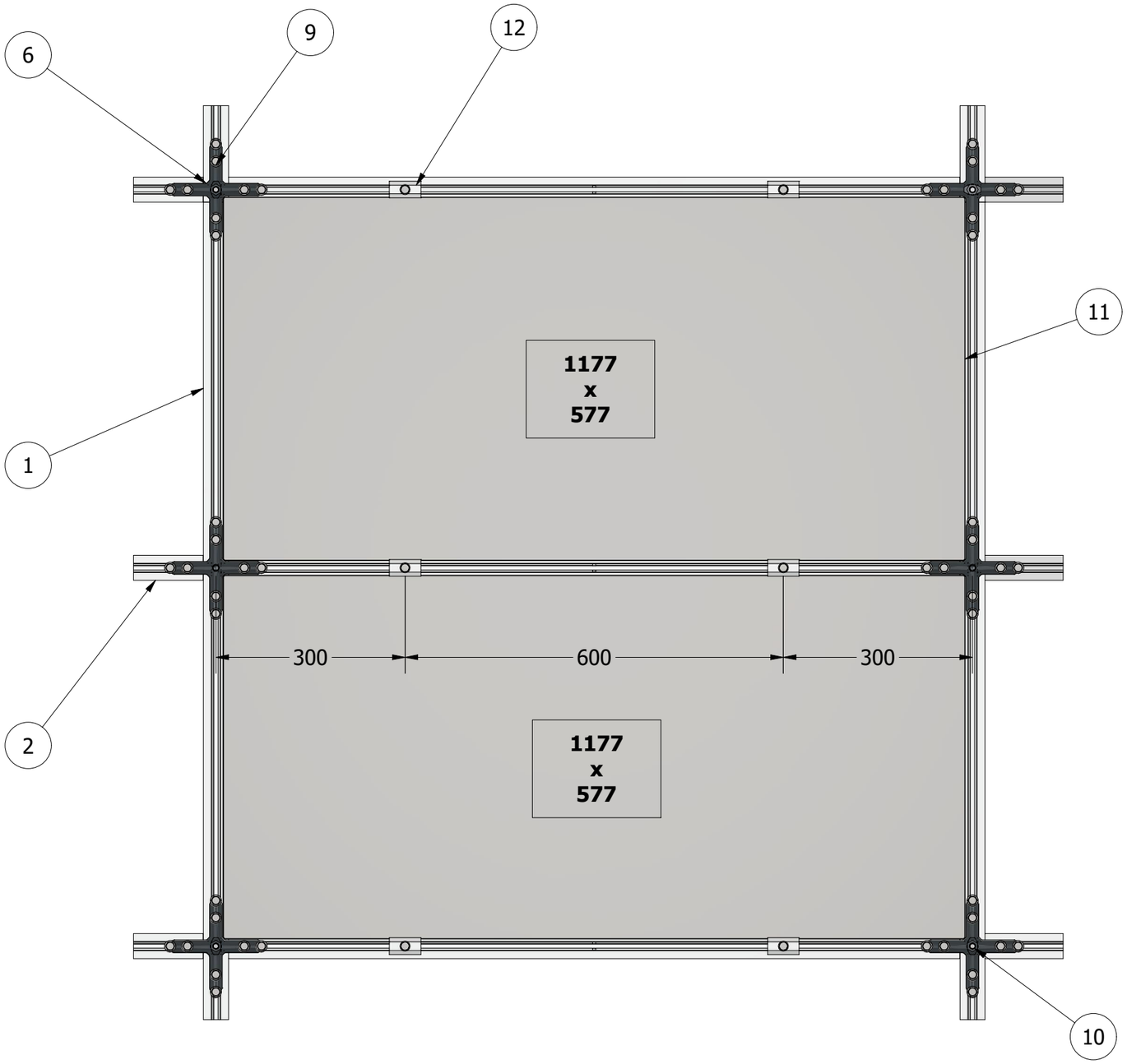

CONFIGURATION OF CEILING TILES

A usual Tate Grid+ LEC layout is 1200x600 centre to centre of the profile. Tate Grid+ LEC tiles come in 1177x577 size to fit inside the grid. Metal pan tiles are 0.7mm thick.

COMPONENTS

1 - Main Runner Extrusion
2 - Cross Tee Extrusion
6 - XL Connector
9 - Screw M8-35 DIN 6921
10 - M10 Turnbuckle Assembly
11 - Ceiling Tile - 1177x577
12 - Accessibility Screw Clip

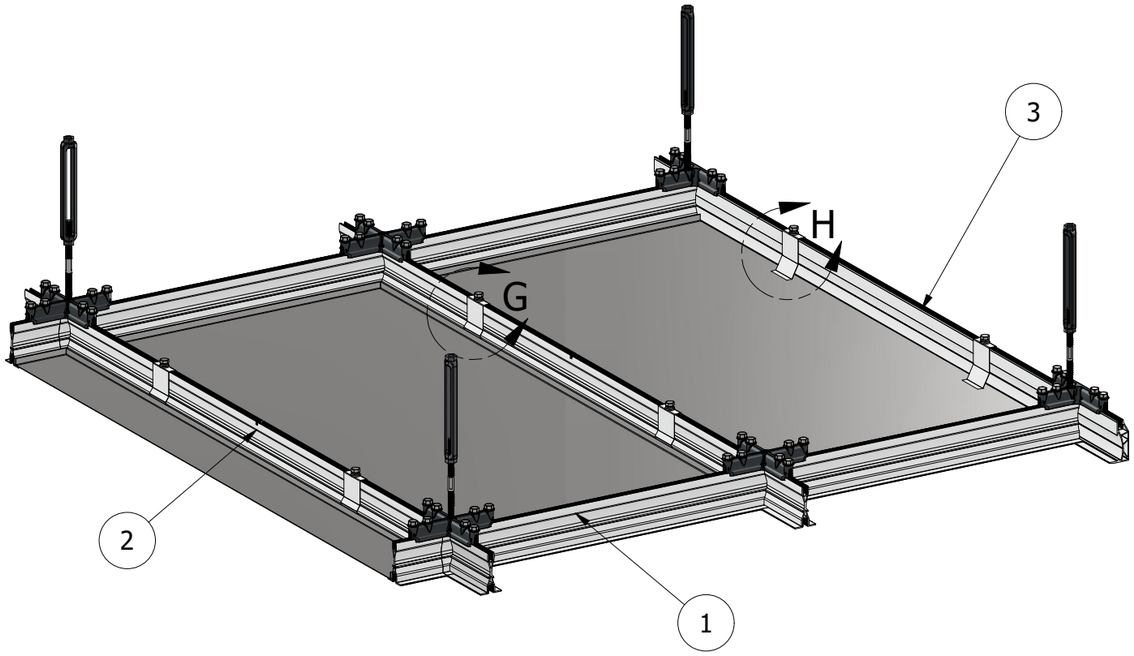

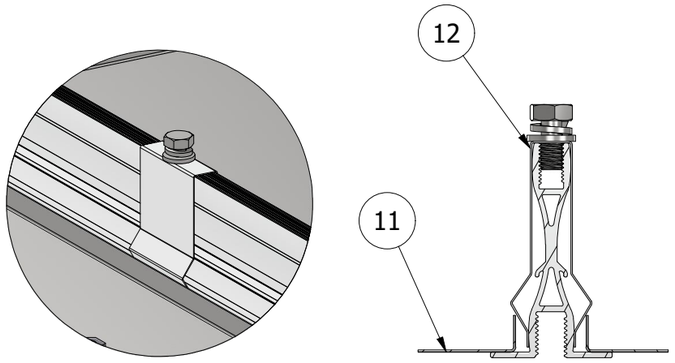

DETAIL G
SCALE 1 / 3
ACCESSIBILITY SCREW CLIP
ON MAIN RUNNER OR CROSS TEE

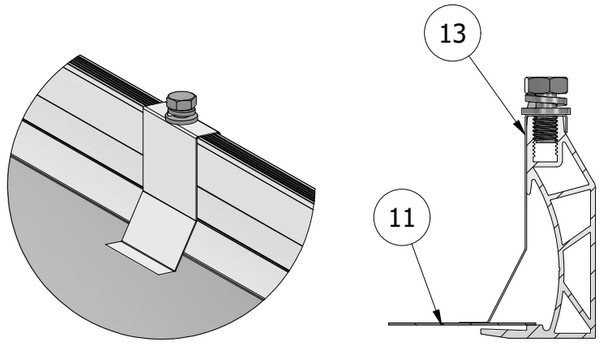

DETAIL H
SCALE 1 / 3
SECURITY HOLD DOWN CLIP
ON PERIMETER

TATE GRID+ LEC CLIPS

Type: Accessibility Clip
Used for: Fixing metal tiles. Spring mechanism allows for tiles to be installed and/or removed from below the ceiling

Type: Security Hold Down Clip
Used for: Fixing metal tiles. Require installing the clips after the tiles have been laid. Removing the tiles is not possible from below the ceiling. Removing the tiles require prior removal of clips. Used on all edges where the tile has been cut to suit the grid.

COMPONENTS

1 - Main Runner Extrusion
2 - Cross Tee Extrusion
3 - Perimeter Extrusion
11 - Ceiling Tile - 1177x577
12 - Accessibility Screw Clip
13 - Security Hold Down Clip